Oct.1.2025 Copyright 2025 HIROSE ELECTRIC CO., LTD. All Rights Reserved.
In case of consideration for using Automotive equipment / device which demand high reliability, kindly contact our sales window correspondents.

COUNT	DESCRIPTION OF REVISIONS	BY	CHKD	DATE	COUNT	DESCRIPTION OF REVISIONS	BY	CHKD	DATE

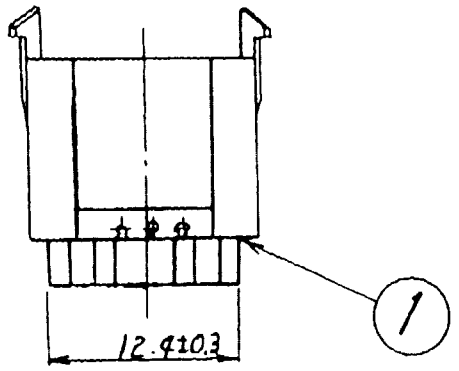

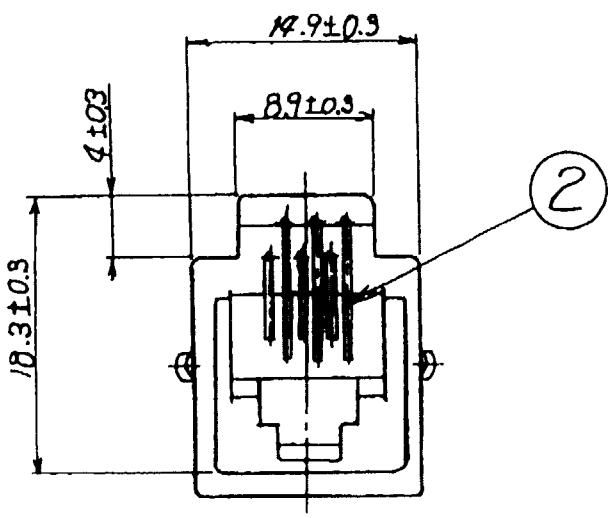

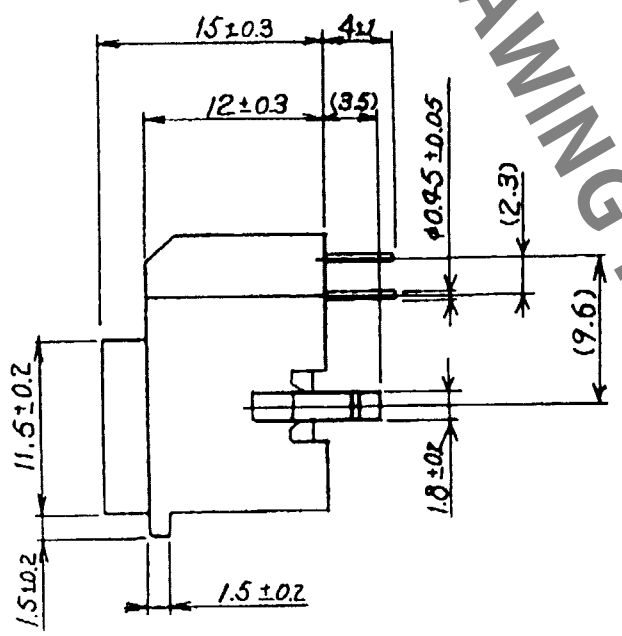

RECOMMENDED PC BOARD HOLE PATTERN (4:1)
(MOUNTING SIDE)

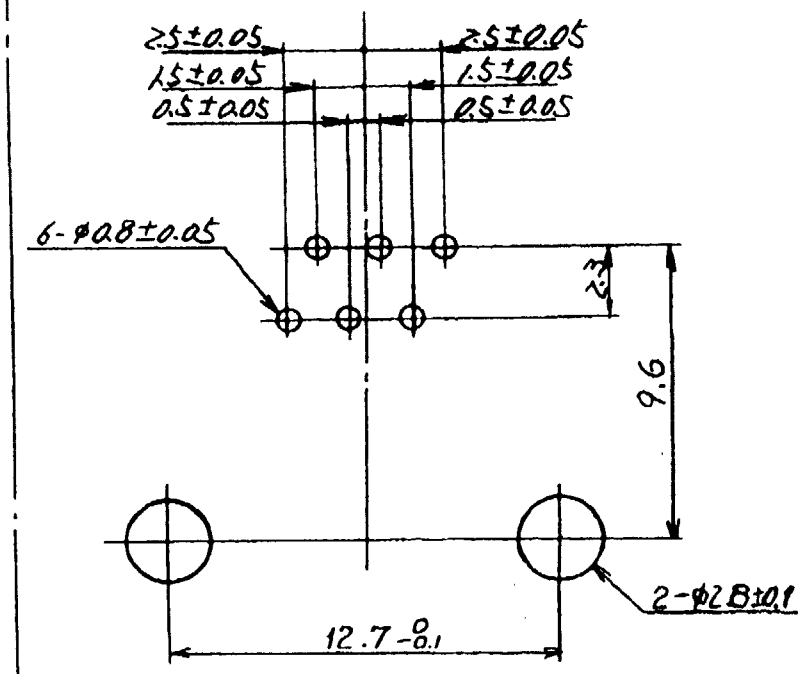

HRS DRAWING FOR REFERENCE

NO.	MATERIAL	FINISH, REMARKS	NO.	MATERIAL	FINISH, REMARKS
1	PBT	UL94V-0 (VANILLA WHITE)	2	PHOSPHOR BRONZE	SELECTIVE GOLD PLATING 1.27μm

CODE NO.(OLD)	DRAWN	DESIGNED	CHECKED	APPROVED	RELEASED
	T. Kameya 03.12.15	T. Kameya 03.12.15	T. Watanabe 03.12.16	H. Miura 03.12.16	

SCALE 2 : 1	DRAWING NO. EDC3-022457-01	PART NO. TM3RA-66(50)
UNITS mm	HRS HIROSE ELECTRIC CO.,LTD.	CODE NO. CL222-0770-1-50 1/1

FORM NO. 229

TO
Q